Fire Alarm Telephones

Overview

ADT fire alarm telephones are rugged communications devices for emergency use. Enclosed keylocked telephone stations comprise three separately ordered components: the handset assembly, the frontplate, and the wallbox. Depending on how the phones are wired, they are supervised for three or four state operation. Frontplates are available with either metal or break glass insterts.

MEA approved warden stations feature doors with magnetic latches and one-state handsets with armoured cords. Warden stations mount to 6832-1 wallboxes.

Portable handsets plug into one-gang receptacles. Handsets are available in black or red. The TCS-6 cabinet provides storage for up to six handsets.

Application

Firefighters' telephones are typically installed in corridors, lobbies, mechanical rooms, stairways, or other stategic locations. When lifted from its cradle, or plugged into a suitable wall jack, the handset activates audible and visible signals at the control panel. There, the operator needs only to lift the handset off the cradle to respond to the current call. Other firefighters' telephones may be selected at the control panel to join the conversation.

TCS-6 Handset Storage Cabinet (handsets not included)

Standard Features

6830-NY-F4
6830-NY-S4
6830-NY-F
6830-NY-S

Floor Warden Station

- Magnetic latch
- Red powdercoat finish
- 28-inch armored cord
- Supervised wiring
- Flush or surface mount models
- Concealed Hinges
- Four-state model available

6831-1
6831-3

Frontplate – Break Glass

- Flush or surface mount models
- Red powdercoat finish
- Locking door, concealed hinges
- Break glass insert

6831-4
6831-2

Frontplate – Non-Break Glass

- Flush or surface mount models
- Red powdercoat finish
- Locking door, concealed hinges
- Metal insert

6832-1

Wallbox

- Red powdercoat finish
- Flush or surface mount
- For use with 6831 series front plates
- Flush or surface mount

6830-1,
6830-4
6830-5A
6830-6A
6830-5A4
6830-6A4

Handset Assembly

- Red ABS plastic handset
- 60 inch (1500 mm) coiled cord set
- Supervised wiring
- For use with 6831 series front plates
- Four-state models available

6833-1, 6833-4

6830-3
6700-0061

Portable Handsets and Receptacle

- Black or red ABS plastic handset
- 60 inch (1500 mm) coiled cord set
- Supervised wiring
- Stainless-steel one-gang faceplate
- Flush or surface mount receptacle
- Four-state models available

Mounting

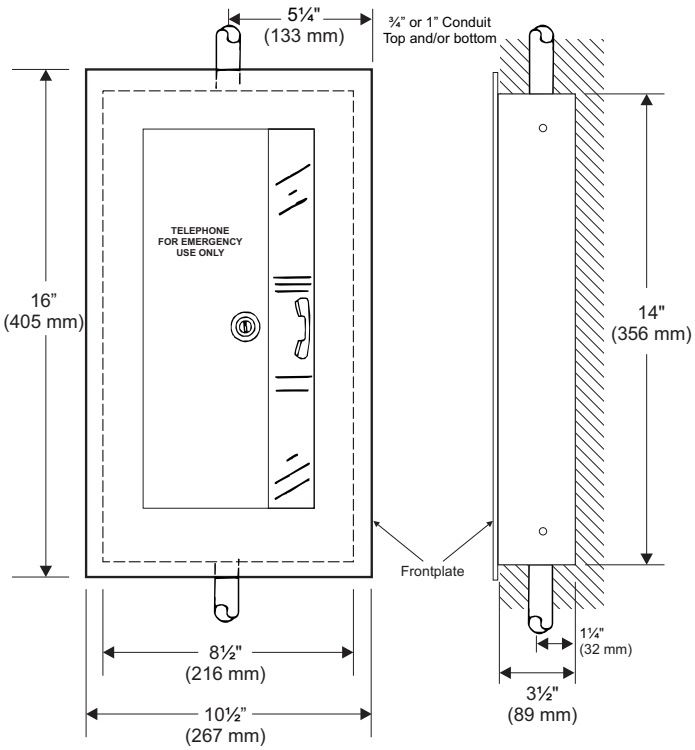

Flush Mounting

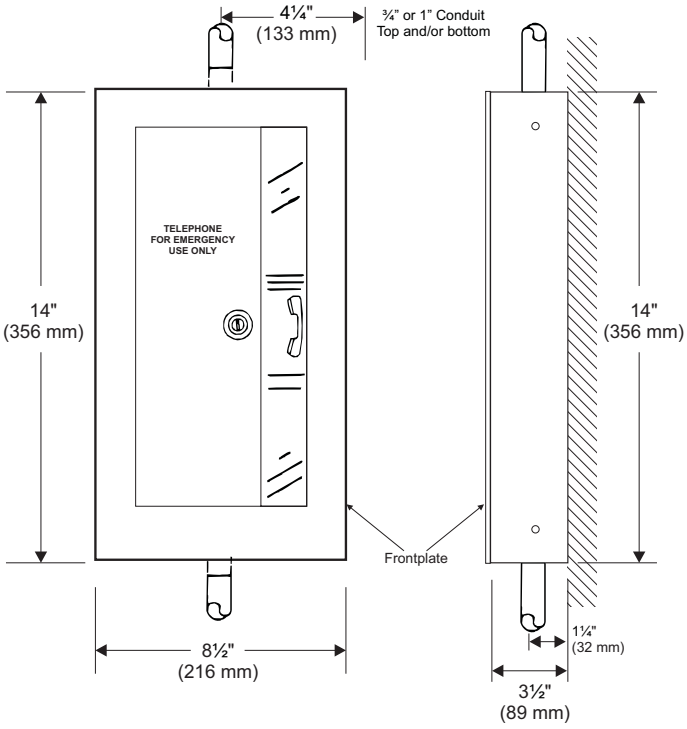

Surface Mounting

Assembly

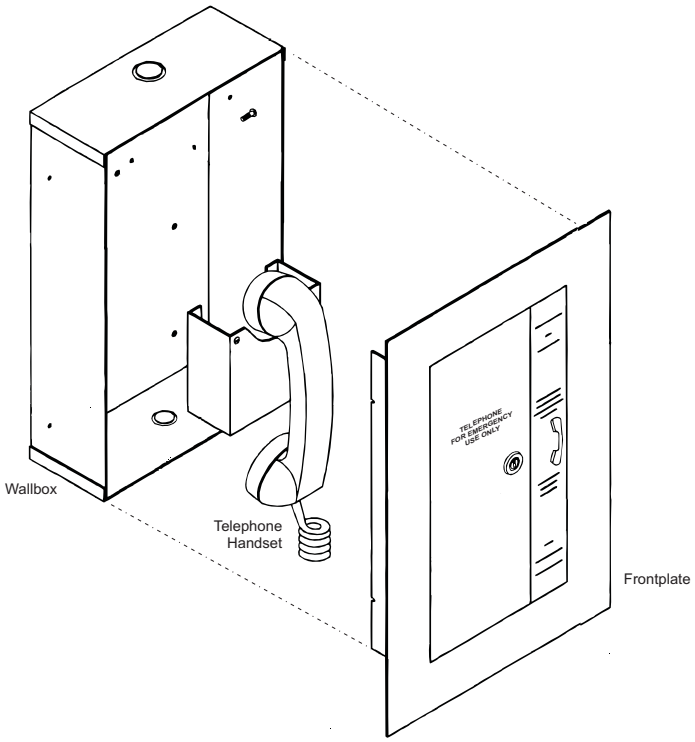

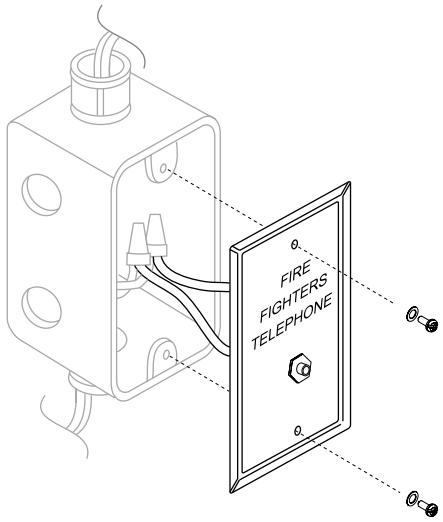

ADT recommends that these fire alarm communication devices always be installed in accordance with the latest recognized editions of national and local fire alarm codes.

Typical Wiring

Telephone Riser Connections, Stations & Assemblies

Four-state operation

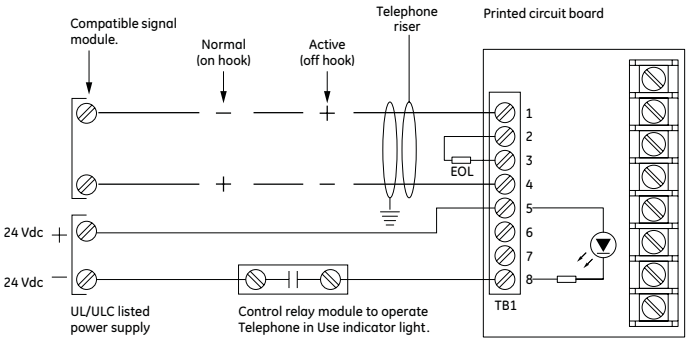

Three-state operation

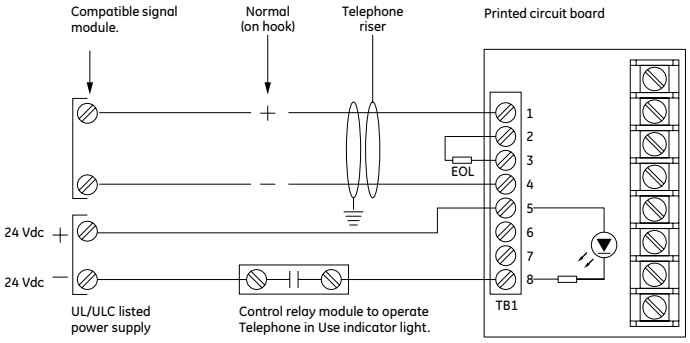

Notes

[1] Use jacketed, twisted, shielded pair
[2] 14 to 22 AWG (2.08 to 0.33 sq mm)
[3] Max. line impedance: 50 Ohms, 25 Ohms per line
[4] Connect the shields to chassis ground in the control panel
[5] *Telephone in Use* indicator light (NY versions only)

Three-state operation does not comply with UL 864 ninth edition.
Note that the riser polarities for differ between three-state and four-state operation.

Telephone Riser Connections, Handsets

Four-state operation

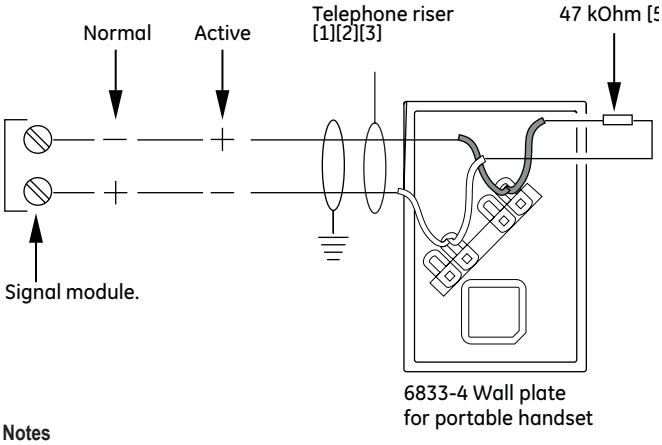

Three-state operation

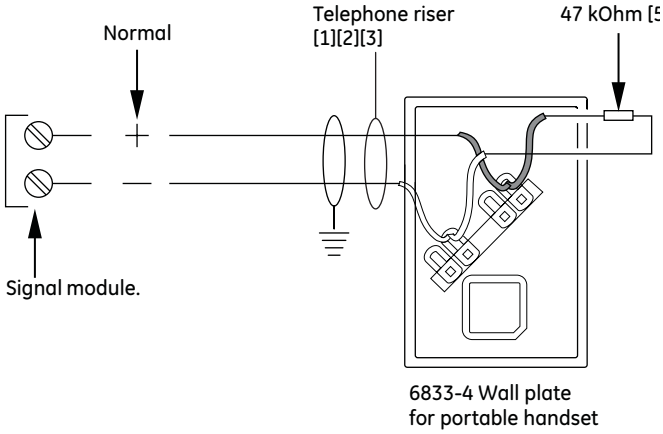

Notes

[1] Use jacketed, twisted, shielded pair
[2] 14 to 22 AWG (2.08 to 0.33 sq mm)
[3] Max. line impedance: 50 Ohms, 25 Ohms per line
[4] Connect the shields to chassis ground in the control panel
[5] Install a 47 k Ohm EOL resistor on the last unit only

Three-state operation does not comply with UL 864 ninth edition.
Note that the riser polarities for differ between three-state and four-state operation.

Ordering Information

Catalog Number	Description	Listings	Shipping Weight
Warden Stations			
6830-NY-F4	Four-state Remote Telephone Warden Station - Flush. Handset station for use with 6832-1 backbox. Hinged flush door with magnetic latch. Handset includes armored cord.	UL, MEA	12 lb (5.4kg)
6830-NY-S4	Four-state Remote Telephone Warden Station - Surface. Handset station for use with 6832-1 backbox. Hinged surface door with magnetic latch. Handset includes armored cord.	UL, MEA	12 lb (5.4kg)
6830-NY-F	Remote Telephone Warden Station - Flush. Handset station for use with 6832-1 backbox. Hinged flush door with magnetic latch. Handset includes armored cord.	UL, MEA	12 lb (5.4kg)
6830-NY-S	Remote Telephone Warden Station - Surface. Handset station for use with 6832-1 backbox. Hinged surface door with magnetic latch. Handset includes armored cord.	UL, MEA	12 lb (5.4kg)
Fixed Telephone Handsets (order frontplates and wallboxes separately)			
6830-4	Four-state Telephone Handset Assembly - Red, 60" (1500mm) Coiled Cord.	UL, MEA	6 lb (2.7kg)
6830-5A-4	Four-state Telephone Handset Assembly - Red, 60" (1500mm) Coiled Cord, Push-to-talk button.	UL, MEA	6 lb (2.7kg)
6830-6A-4	Four-state Telephone Handset Assembly - Red, 60" (1500mm) Armored Cord, Push-to-talk button.	UL, MEA	7 lb (3.1kg)
6830-1	Telephone Handset Assembly - Red c/w 60" (1500mm) Coiled Cord.	UL, MEA, CSFM	6 lb (2.7kg)
6830-5A	Three-state Telephone Handset Assembly - Red, 60" (1500mm) Coiled Cord, Push-to-talk button.	UL, MEA	6 lb (2.7kg)
6830-6A	Three-state Telephone Handset Assembly - Red, 60" (1500mm) Armored Cord, Push-to-talk button.	UL, MEA	7 lb (3.1kg)
Portable Telephone Handsets			
6833-4	Four-state Portable Telephone Handset Receptacle 1-gang Stainless-steel Faceplate for use with 6830-3 or 6700-0061.	UL, MEA, CSFM	.22 lb (0.1kg)
6833-1	Portable Telephone Handset Receptacle 1-gang Stainless-steel Faceplate for use with 6830-3 or 6700-0061.	UL, MEA, CSFM	.22 lb (0.1kg)
6830-3	Portable Telephone Handset - Black c/w 60" (1500mm) Coiled Cord.	UL, MEA, CSFM	1.1 lb (0.5kg)
6700-0061	Portable Telephone Handset - Red c/w 60" (1500mm) Coiled Cord.	UL, MEA	1.1 lb (0.5kg)
Frontplates			
6831-1	Frontplate - Flush Mount, Red Finish, Break Glass Type c/w 2 keys. 16" (405 mm) H x 10-1/2" (267 mm) W.	See Note 1	1.32 lb (0.6kg)
6831-2	Frontplate - Flush Mount, Red Finish, Non-Break Glass Type c/w 2 keys. 16" (405 mm) H x 10-1/2" (267 mm) W.		1.32 lb (0.6kg)
6831-3	Frontplate - Surface Mount Red Finish, Break Glass Type c/w 2 keys. 14" (356 mm) H x 8-1/2" (216 mm) W.		1.1 lb (0.5kg)
6831-4	Frontplate - Surface Mounting Red Finish, Non-Break Glass Type c/w 2 keys. 14" (356 mm) H x 8-1/2" (216 mm) W.		1.1 lb (0.5kg)
PP46137-0067	Replacement Break Glass Insert - for use in 6831-1 and 6831-3.		1.1 lb (0.5kg)
Wallboxes			
6832-1	Wallbox - Flush or Surface mount, Red finish. 14" (356mm) H x 8-1/2" (216mm) W x 3½" (89mm) D.	See Note 1	1.54 lb (0.7kg)
TCS-6	Portable handset storage cabinet. Surface mount c/w keylock. Red finish with white lettering: "Emergency Telephone Handsets". 15½" (394 mm) H x 24-1/8" (613 mm) W x 4"(102) D.	N/A	12 lb (5.4kg)

Note 1: Agency listings for these components are included under the handset assemblies or warden stations they are installed with.

© 2007 ADT Security Services, Inc.
One Town Center Road
Boca Raton, FL 33489
www.adt.com